C

PIRANHA®

S10/4, S13/4, S12/2
S16/2, S18/2, S21/2
S26/2, S17/2, S30/2

Workshop Manual

(4) 15975117 GB 07/02

A

WORKSHOP MANUAL
PIRANHA®

CONTENTS **PAGE**

1 GENERAL....3

1.1 Safety....3
1.1.1 Safety precautions....3
1.2 General maintenance advice....3
1.3 Technical data....4
1.4 Description of PIRANHA®....4

2 INSTALLATION....4

3 MAINTENANCE....4

3.1 Oil filling and oil change....5
3.1.1 Oil change on site....5
3.1.2 Oil Quantities....6

4 REPAIR....6

4.1 Changing shredder....6
4.2 Changing impeller....6
4.3 Outer mechanical seal changing....7
4.4 Inner mechanical seal & Lip seal changing....9
4.5 Cable changing....10
4.6 Motorhousing removal and refitting....11
4.7 Upper bearing removal and refitting....11
4.8 Lower bearing removal and refitting....11
4.9 DI changing removal and refitting....12
4.10 Stator removal....13

5 TESTS....14

5.1 Air gap....14
5.2 High voltage....14
5.3 Earth check....14
5.4 Pressure....14
5.5 Run test....15

6 TROUBLESHOOTING TIPS....16

7 TOOLING DRAWINGS 17

7.1 TOOL STATOR PULLER Ø 55 mm 17
7.2 TOOL STATOR PULLER Ø 62 mm 18
7.3 TOOL STATOR PULLER Ø 70 mm 19
7.4 TOOL BEARING LOWER PRESS SMALL MOTOR 20
7.5 TOOL BEARING LOWER PRESS LARGE MOTOR.....21
7.6 TOOL MECHANICAL SEAL PRESS INNER FIXED 22
7.7 TOOL LIP SEAL PRESS INNER.....23
7.8 TOOL MECHANICAL SEAL PRESS INNER ROTATIONAL.....24
7.9 TOOL MECHANICAL SEAL SLEEVE OUTER.....25
7.10 TOOL MECHANICAL SEAL PRESS OUTER FIXED/ROTATIONAL 26
7.11 TOOL STATOR INSERTION DIAMETER 106.5 mm 27
7.12 TOOL STATOR INSERTION DIAMETER 135 mm 28
7.13 TOOL PRESSURE TEST (OIL CHAMBER CONNECTION) 29
7.14 TOOL PRESSURE TEST (MOTOR HOUSING CONNECTION).....29
7.15 TOOL BEARING LOWER SUPPORT.....30
7.16 TOOL STATOR EXTRACTION FRAME.....31

WORKSHOP MANUAL
PIRANHA®

1 GENERAL

Illustrations, e.g. (3/2) indicates the Fig. number using the first digit and the second digit indicates the position on that illustration.

1.1 Safety

When carrying out any repairs the safety instructions in the Workshop Manual as in the Installation and Operating Instructions, especially the section "Safety" must be observed.

When carrying out any work correctly sized and adequately dimensioned hoists and other tools should be used. Do not work under a suspended load.

1.1.1 Safety precautions

- Before doing any maintenance or repairs to the pump, make sure that it is isolated from the power supply, and also that no one can reconnect it whilst it is being worked on.
- When raising the pump, do so by means of a rope or a chain through the handle or eyebolt. Never move or lift a pump by means of its cable.
- If the pump has been working in sewage or similar effluent, use a power or steam hose to clean the pump before working on it, and observe personal hygiene precautions.

Electrical work on the pumps should only be carried out by suitably qualified personnel.

1.2 General maintenance advice

- Before assembly all parts should be carefully checked.
- Parts being reused must be in perfect condition and should be carefully cleaned before fitting.

ATTENTION Mechanical seals, shaft seals, o-rings and other seals should **always** be replaced. Only in an emergency and after careful checking may these parts be used again!

- Only oil approved by the manufacturer should be used.

Waste oil should be disposed of in a proper manner!

ATTENTION The pressure testing carried out in the individual sections must be carefully and properly carried out!

1.3 Technical data

The PIRANHA® technical data is given in the Installation and Operating Instructions

1.4 Description of PIRANHA®

The description of the PIRANHA® is given in the Installation and Operating Instructions

ATTENTION The thermal sensors must be correctly connected into the control panel.

Depending on the layout in the control panel, the submersible pump may switch itself automatically back on after it has cooled down.

As an option PIRANHA® pumps are available with a DI system for seal monitoring consisting of an electrode in the oil chamber. The signal from the DI electrode is monitored by an integral DI module in the control panel and can give an optical or sound signal that an inspection is due in the case of leakage at the shaft seal.

ATTENTION In the case of explosion-proof versions, the moisture sensing device is located in the motor and not in the oil chamber.

2 INSTALLATION

NOTE The submersible pump should be installed in accordance with the Installation and Operating Instructions.

3 MAINTENANCE

When carrying out any maintenance or repair work the safety regulations covering work in enclosed areas of sewage plants, as well as good technical practice, should be followed.

Before commencing any maintenance work the pump should be completely disconnected from the mains and care should be taken that it cannot be inadvertently switched back on.

ATTENTION Repair work on Explosion-proof motors should only be carried out by qualified persons and should only take place in certified workshops. In the case of repairs only original spare parts supplied by the manufacturer should be used.

NOTE The guarantees supplied by ABS are only valid if any repair work has been carried out by an approved ABS workshop and original ABS spare parts have been used.

3.1 Oil filling and oil change

The oil chambers of the ABS submersible pumps have been filled at the works with oil.

Initial works filling: **Lubricating Oil, Oil white ISO VG15 FP175 C.**

A regular oil change is not necessary, provided that the DI seal monitor signal is not activated. ABS submersible seal monitoring system indicates by means of an inspection light that water has entered into the oil and that the mechanical seal is leaking and must be replaced.

ATTENTION When using the submersible pump in process or raw water applications an oil which is not injurious to the environment should be used.

ATTENTION Waste oil should be disposed of in a proper manner.

3.1.1 Oil change on site

When carrying out an oil change the regulations covering usage of oil must be observed. Waste oil must be disposed of in a proper manner.

Tilt pump so that it lies horizontal. Position oil plug hole at the underside of the pump. Oil is released by unscrewing the oil plug screw (1) with sealing washer (2) in the volute. The oil will then flow out and into container. It may be slow because oil chamber has not been vented. See Fig. 1

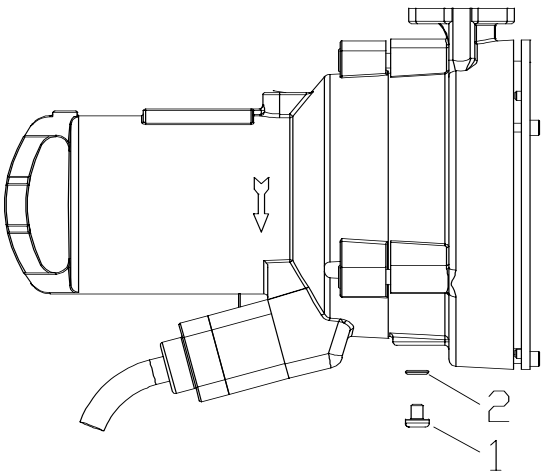

Fig. 1

TIP: To speed up emptying, insert a small bore tube (Ø 3-4mm) deep into oil chamber to aid unrestricted venting.

REFILLING OIL

Place motor in position opposite to Fig.1, so that oil plug hole faces upwards. Fill in oil slowly, allowing air to vent out through same hole. Check and replace sealing washer if necessary.

3.1.2 Oil Quantities

PIRANHA® Oil Fill Quantity Oil Chamber

PIRANHA® 50 Hz				PIRANHA® 60 Hz		
Pump Type		Litres		Pump Type		Litres
PIRANHA®	S10/4	0,53		PIRANHA®	S10/4	0,53
PIRANHA®	S13/4	0,53		PIRANHA®	S16/2	0,53
PIRANHA®	S12/2	0,53		PIRANHA®	S18/2	0,53
PIRANHA®	S17/2	0,53		PIRANHA®	S26/2	0,53
PIRANHA®	S21/2	0,53		PIRANHA®	S30/2	0,53
PIRANHA®	S26/2	0,53				

4 REPAIR

4.1 Changing shredder

Removal
Place pump on its side on the work bench, taking care that it can not roll over. Unscrew the 3 bolts (2/37) from bottom plate (2/34) and remove the shredding ring (2/39) and gasket (2/36). Take out screw (2/6) and washer (2/7). Now remove shredding rotor (2/39) and dowel (2/17).

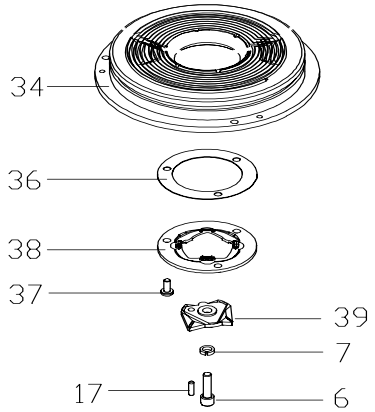

Fig. 2

Refitting
Insert dowel and then locate shredding rotor on boss of the impeller and refit bolt and washer. Place gasket and shredding ring onto bottom plate and hand tighten screws (2/37). Rotate shredding ring by hand to centralise shredding ring. Now fully tighten screws (2/37). Check to see that shredding rotor (2/39) is able to rotate freely.

4.2 Changing Impeller

Lay pump on its side on the workbench (with the aid of a hoist), taking care that it cannot roll over. Remove 3 screws (3/16) holding bottom (3/34) to volute. Remove impeller holding screw (3/6), with single washer (3/7). Take off shredding rotor (3/39) and dowel (3/17). Remove impeller (3/32) by using an impeller pullers or if this is not available, the Impeller can also removed using a large screwdriver. Wedge screwdriver behind impeller through the discharge outlet, and tap outer tip of blade with plastic hammer and rock impeller from shaft
Re-assembly takes in reverse action.

Note: It is advisable to fit dowel pin in impeller boss before fitting impeller.

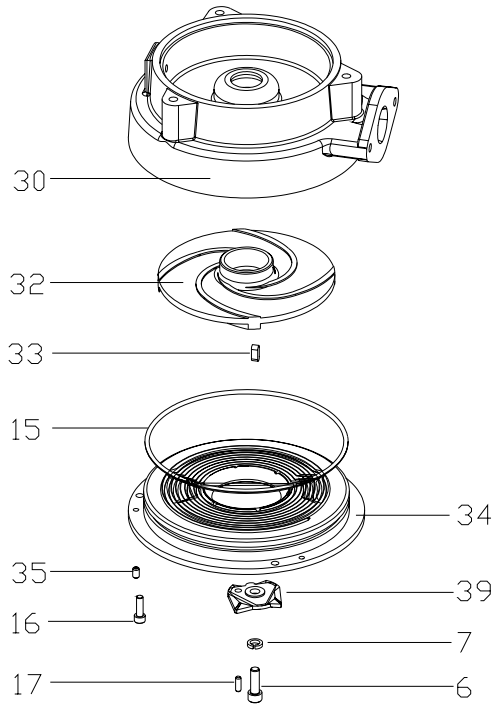

Fig. 3

Note: When refitting impeller, the gap between bottom plate and impeller will need to be adjusted again. This is done as follows:

Place the bottom plate on to the volute so as it rests on the impeller. Screw grub screws (3/35) up to the surface of the volute (3/30). Now turn grub screws (3/35) one full turn more to move bottom plate back from impeller. Allow 0.3 – 0.5mm clearance between bottom plate and impeller. **Check that impeller can rotate freely.** Refit shredding rotor (3/39) and rotate it by hand to centralise shredding ring. Finally screw up 3 holding screws (3/16) tightly into position, and **check that shredding rotor can rotate freely.**

4.3 Mechanical seal (Outer) - removal & refitting

4.3.1 Removal

Before removal of the mechanical seal:

- The oil chamber must firstly be emptied of oil. Refer to 3.1.1
- Impeller must be taken off. Refer to 4.2.

Remove impeller key (3/33) with pliers from the shaft.
Remove circlip (4/27).
Slide off washer (4/14c). Slide mechanical seal (4/14b) with aid of rotating movement, carefully from the shaft. Remove fixed ring (4/14a) from oil chamber (4/30). Taking care to keep all parts thoroughly clean.

NOTE: Mechanical seal must always be exchanged as a complete unit.

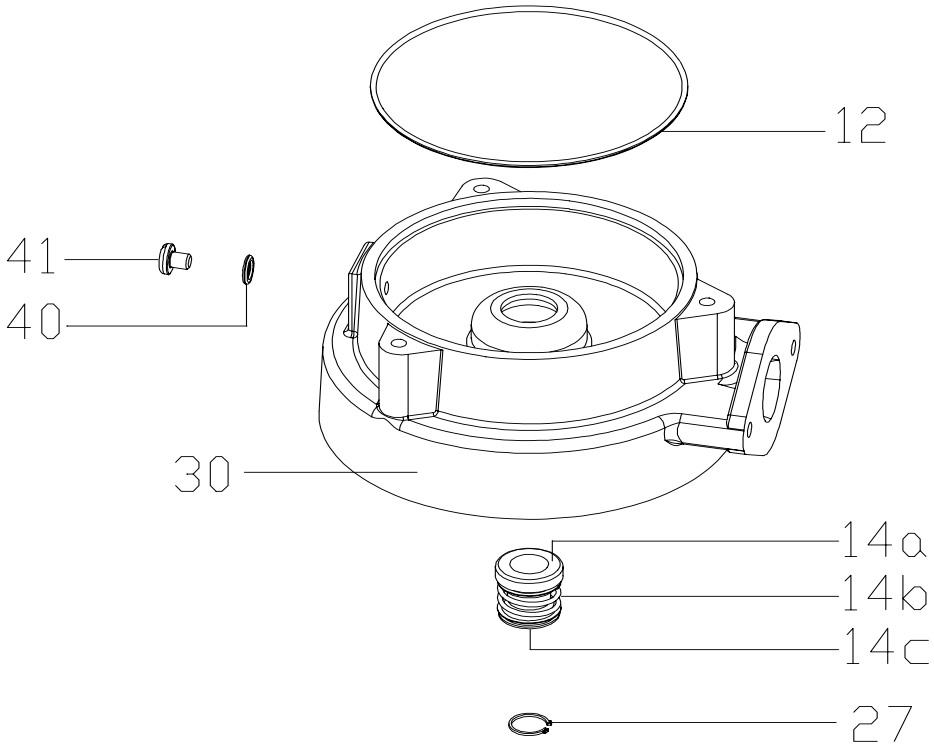

Fig. 4

4.3.2 Refitting

It is important to keep the mechanical seal rubber parts dry to prevent slip between rubber and metal components. If wear grooves are not visible, then the mechanical seal can be refitted. If damaged the mechanical seal must be replaced. When refitting a new mechanical seal absolute cleanliness must be observed.
Remove grease from the shaft. Clean seal seating area of the shaft and volute. Lubricate the boot of the fixed ring (4/14a) and place over the end of the shaft, taking care that it is on straight and press into position in volute using insertion tool 96995190 (see page 22). Place mechanical seal sleeve 96995194 (see page 25) on to the shaft to protect the boot of the rotating ring (3/14B). Lubricate the boot of the rotating ring (4/14b) with soapy water, (do not allow soapy water to come in contact with seal faces) and press carefully home with insertion tool 96995193 (see page 26) as far as the fixed ring. Care must be taken when sliding the mechanical seal over key way slot. Slide washer (4/14c) on and compress the mechanical seal and insert circlip (4/27) into the groove in the shaft. Rotate the shaft by hand a number of times so that the mechanical seal can bed itself in.

Before filling in oil or carrying out any further assembly, check the oil chamber for leaks (see section 5.4). Finally screw back impeller and bottom plate (see section 4.2).

4.4 Mechanical seal motor side (Inner) - removal & refitting

4.4.1 Removal

Dismantle impeller as described in section 4.2 and remove outer mechanical seal as described in section 4.3. Mark position of volute relative to motorhousing. Remove volute by unscrewing 3 screws (6/52). Lay motor assembly on the workbench on its side, so that it cannot roll over. Remove o-ring (4/12) from volute and replace.
Remove circlip (5/56) with circlip pliers. Slide mechanical seal (5/55b) with aid of rotating movement, carefully from the shaft. Remove fixed ring (5/54a) from bearing lid. Taking care to keep all parts thoroughly clean.

NOTE: Mechanical seal must always be exchanged as a complete unit.

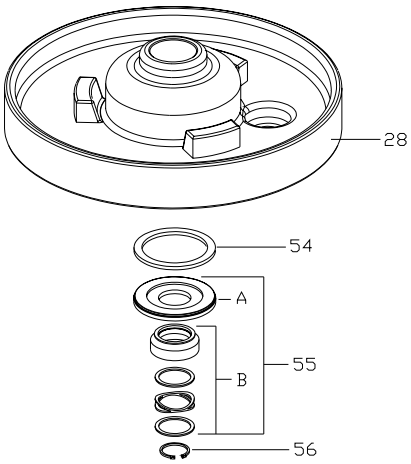

Fig. 5

4.4.2 Refitting

It is important to keep the mechanical seal rubber parts dry to prevent slip between rubber and metal components. If wear grooves are not visible, then the mechanical seal can be refitted. If damaged the mechanical seal must be replaced. When refitting a new mechanical seal absolute cleanliness must be observed.
Remove grease from the shaft. Place support washer (5/54) onto shaft and slide it down into the bearing lid (5/28). Clean seal seating area of the shaft and bearing lid. Lubricate the boot of the fixed ring (5/55a) and place over the end of the shaft, taking care that it is on straight and press into position in lid using insertion tool 96995190 (see page 22). Place mechanical seal sleeve 96995194 (see page 25) on to the shaft to protect the boot of the rotating ring (5/55b). Lubricate the boot of the rotating ring (5/55b) with soapy water, (do not allow soapy water to come in contact with seal faces) and press carefully home with insertion tool 96995191 (see page 24) as far as the fixed ring. Care must be taken when sliding the mechanical seal over key way slot. Compress the mechanical seal and insert circlip (5/56) into the groove in the shaft. Rotate the shaft by hand a number of times so that the mechanical seal can bed itself in. Before filling in oil or carrying out any further assembly, check the oil chamber for leaks - see 5.4. Finally reassemble outer mechanical seal (see section 4.3) and screw back impeller and bottom plate (see section 4.2).

4.4.3 Lip seal

Removal
Dismantle impeller as described in section 4.2 and remove outer mechanical seal as described in section 4.3. Mark position of volute relative to motorhousing. Remove volute by unscrewing 3 screws (6/52). Lay motor assembly on the workbench on its side, so that it cannot roll over. Remove o-ring (4/12) from volute and replace. Collapse the lip seal in two places and prise it out with a screwdriver, taking care not to damage the shaft and bore. Take out support washer (5/54).

Refitting
Firstly remove grease from shaft. Replace support washer and place lip seal over shaft and tap down home using insertion tool 96995189 (see page 23). Refit volute (4/30), making sure it lines up with motorhousing according to marks put on earlier. Refit outer mechanical seal (section 4.3). Before filling in oil or further assembly, check the motor/oil chamber for leaks - see 5.4. Refer to sections 4.2 for completion of reassembly.

4.5 Motor cable and cable cap connection removal and refitting

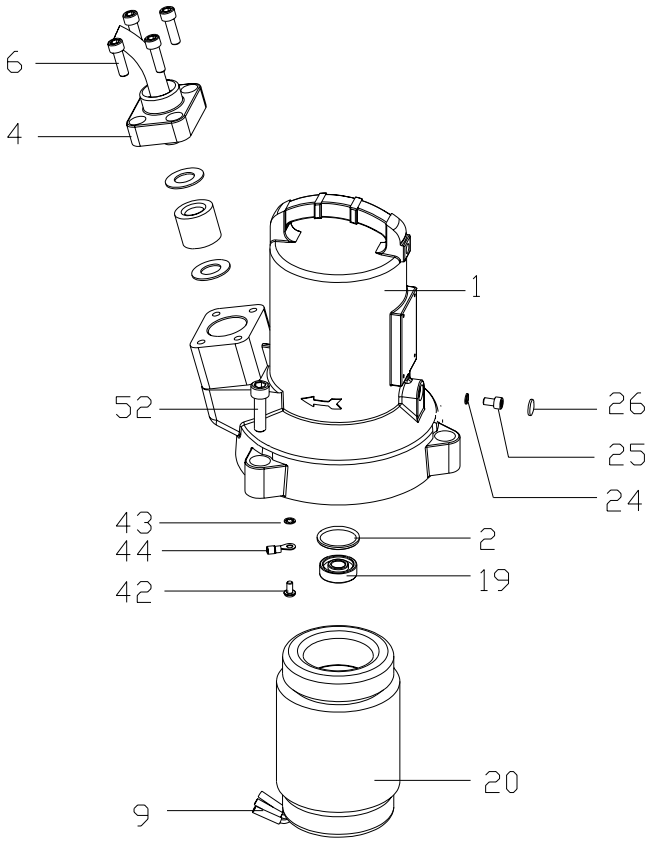

Fig. 6

Mark position of motorhousing relative to volute. Remove the 3 screws (6/52) and washers (6/51) holding the motorhousing to the volute. Lift motorhousing, with a hoist, a few inches while holding impeller down with a heavy screwdriver, jammed behind impeller through volute outlet, to avoid damage to mechanical seals, and release DI plug connection from DI probe (7/71). Lift motorhousing clear of motor and hydraulics, and place on its side on workbench. Snip all leads leading to stator (6/20), at the plastic butt connection (6/9). Unscrew earth connection from the underside of the motorhousing (6/42,6/44,6/43). Unscrew 4 screws (6/6) holding cable cap (6/4) to motorhousing (6/1). Pull cable and cable cap from motor. Replace cable and reconnect as per wiring diagrams in the instruction book. New butt connections must be used to reconnect leads to stator. Reconnect earth lead and re-assemble in reverse to above instructions, not forgetting DI probe and that it is not trapped. After reassembly perform pressure test - see 5.4.

4.6 Motorhousing removal and refitting

If the motorhousing or stator needs to be replaced, then it is not necessary to dismantle the hydraulics.
Proceed as described in section 4.5 up to placing the motorhousing on workbench. Do not cut any stator leads. Disconnected DI lead (section 4.9) and unscrew earth lead (6/42). When refitting be careful that DI lead is re-inserted carefully and is not kinked or likely to be caught under the motorhousing. After reassembly perform pressure check - see 5.4

4.7 Upper bearing removal and refitting

If the upper bearing needs to be replaced, then it is not necessary to dismantle the hydraulics. Remove motorhousing as per section 4.6. This leaves rotorblock and rotor with top bearing (6/19) accessible. Bearing can be removed using bearing pullers or levered off with screwdrivers, o-ring (6/2) in motorhousing should be replaced. **Lubricate bearing with grease** and refit bearing making sure o-ring (6/2) is fitted back correctly into the groove in the motorhousing. After reassembly perform pressure test - see 5.4.

4.8 Lower bearing & shaft removal and refitting

4.8.1 Removal

This involves a total disassembly of the pump. Firstly remove impeller (section 4.2). Next remove lower mechanical seal as per section 4.3, making sure oil is drained off (section 3.1.1). Remove mechanical seal (or lip seal) section 4.4. Remove motorhousing as per section 4.6. Lay rotor assembly on its side. Remove bearing circlip (7/13) and remove shaft circlip (7/27). Gently tap rotorshaft downwards through the bearing lid. When shaft is removed the lower bearing can then be pressed out. This is done by tapping the bearing out from the rotor side of the bearing lid with a soft punch.

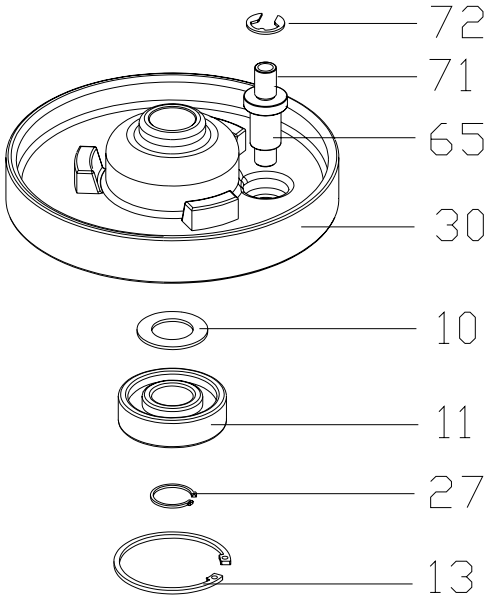

Fig. 7

4.8.2 Refitting

Place support washer (7/10) back into bearing lid and press new bearing back into bearing lid using insertion tool 96995192/96995201 (see page 20/21) and **lubricate bearing with grease,** refit circlip. Support inside race of bearing with fixture (see page 28) to allow shaft through. Press shaft down through bearing lid and bearing. The remainder of reassembly is a reversal of the above section 4.8.1. After reassembly perform pressure check - see 5.4.

4.9 DI removal and refitting

When replacing the lower bearing, the DI probe can also be replaced if necessary.
Non EX versions: Remove plug from DI probe (7/71) if not already removed. Release circlip (7/72) and remove probe (7/65).
EUROPEAN EX versions: DI probe is held on with a small L bracket. It is located on the motor side of the bearing lid.
AMERICAN EX versions: DI probe is screwed directly into bearing lid.

4.10 Stator removal

The stator is held in by a compression fit only, so therefore it can only be removed by pulling it out by force. Remove cable and cable cap (section 4.5), and also remove motorhousing (section 4.6) from hydraulic section.
The stator is then pulled out by means of a hollow cylinder. It is not recommended to heat the housing as a means of removing stator alone, but **flash** heating can assist in stator removal. The extraction tool consists of a frame, a stop, a hydraulic cylinder (see page 31) and stator pullers. The stator pullers are designed so that it can be inserted at an angle to the bottom of the stator. Refer to table below. There are 3 different sizes to suit each stator bore.

MOTOR TYPE	PAGE
S12/2, S16/2, S17/2, S18/2	17
S21/2, S26/2, S30/2	18
S10/4, S13/4	19

The stator pullers is then pulled up along with the stator.

Refitting of stator can only be done by means of a heavy press and insertion tool. Refer to table below. A pressure of up to 6 tons must be applied for largest size motor.

GROUP	MOTOR TYPE	PAGE
SMALL	S10/4	28
	S13/4	
	S12/2	
	S17/2	
	S16/2	
	S18/2	
LARGE	S21/2	29
	S26/2	
	S30/2	

5 TESTS

5.1 Air gap

When reassembling stator and rotor, the gap is set by the tolerances of the machined parts and is not changeable.

5.2 High voltage test

A high voltage test is recommended if the pump has been repaired or reassembled.
Link all power leads together and apply a high voltage between earth and power leads. A voltage of 1,800 volts (= 2 x rated voltage + 1000 volts) is used. This test should only last one second. This test will show any breakdown of insulation.

5.3 Earth check

A earth check is recommended if the pump has been repaired or reassembled. This involves checking the continuity between earth lead and the motorhousing (where earth lead is connected). This can be done with a resistance meter.

5.4 Pressure test

This is performed to check sealing of the unit and is recommended if the pump has been repaired or reassembled. **All pressure testing must be carried out without oil in the oil chamber of the volute.**
Firstly drain the oil from oil chamber - see section 3.1.1
NOTE: It is absolutely essential the testing be carried out in the following manner to prevent dislodging the lip seal in bearing lid.

5.4.1 Motor house/Volute connection

Remove pressure test screw (4/41) and washer (4/40) from oil chamber of the volute. Screw pressure test probe 96995206 (see page 29 Fig. A), with sealing ring, into test hole and apply pressure of ½ bar (7 psi) - **not to be exceeded**. This process will check the sealing of the outer and inner mechanical seal, DI probe and sealing between volute and motorhousing.

5.4.2 Motor connection

Remove pressure test screw (6/25) from motorhousing with sealing ring (6/24) and seal washer (6/26). Screw pressure test probe 96995206 (See page 29 Fig. B) with sealing ring into test hole and apply pressure of ½ bar (7 psi). - **not to be exceeded.** This process will check the sealing of the motor chamber, i.e. cable entry and sealing into the oil chamber.

5.4.3 Pressure test

Lower into water. Leave motor submerged for a few minutes, to allow trapped air to excape, and observe any leaks, which is indicated by a flow of bubbles.
Raise pump from water and disconnect pressure from motorhousing first and then the oil chamber.

5.4.4 Additional test

The sealing between oil chamber and motorhousing (Mechanical/lip seal & DI probe) can be checked by applying pressure to oil chamber as in 5.4.1, and connecting an U-tube to the motorhousing through the test hole, to detect pressure difference in motorhousing. The U-tube should contain a small quantity of water in the bend; if it displaces then there is a leak from the oil chamber. This is a dry test.

5.5 Run test

A dry run test should be run to check the amps, voltage, and power drawn against rated data. See instruction booklet for table of rated data. If this dry test is run without oil in the oil chamber it should only be run for 12 seconds maximum otherwise damage could occur to the mechanical seal.

6 TROUBLESHOOTING TIPS

Before working on a pump use a power or steam hose to clean it. Observe personal hygiene precaution.

TEST	POSSIBLE FAULT	ACTION
1 Visual check	• Damaged power cable. • Impeller jammed.	• High voltage & Ohms test before replacing. • Inspect and remove jammed object.
2 High voltage Test failure	• Water inside motor. • Stator insulation damaged. • Power cable or lead damaged.	• Refer to PROBLEM 2. • Replace stator. • Replace power cable.
3 Ohms test	• Stator failure. • Water inside motor.	• Refer to test 2 • Refer to PROBLEM 2

PROBLEM	POSSIBLE CAUSE	ACTION
1 • Water in oil chamber. • D.I. light switches on. (if connected)	• Loose or damaged oil plug. • Mechanical seal failure.	• Check plug – Replace. • Replace mechanical seal. • Clean and dry out oil chamber.
2 Water inside Motorhousing.	• Damaged lip seal or mechanical seal. • Damaged o-ring between volute and motorhousing. • Cut in jacket or power cable.	• Replace seal. • Replace o-ring. • Clean and dry out oil chamber. • Replace jacket or power cable.
3 Low head	• Incorrect rotation. • Bottom plate gap too large.	• Check rotation. (see installation instruction) • Adjust bottom place gap. (section 4.1)
4 Over heating • Pump switching on/off intermittently. • Klixon light switches on. (if connected)	• Build up of sludge around impeller. • Pump running on unsubmerged (dry).	• Remover impeller and clean all around. • Check float operation and control panel.

7 TOOLING DRAWINGS

7.1 TOOL STATOR PULLER Ø 55 mm

Drawing Number: 96995167-01
Issue Date: 30/01/98
Material: B.MS
Dimensions in mm
Untoleranced machined dimensions to DIN 7168 m

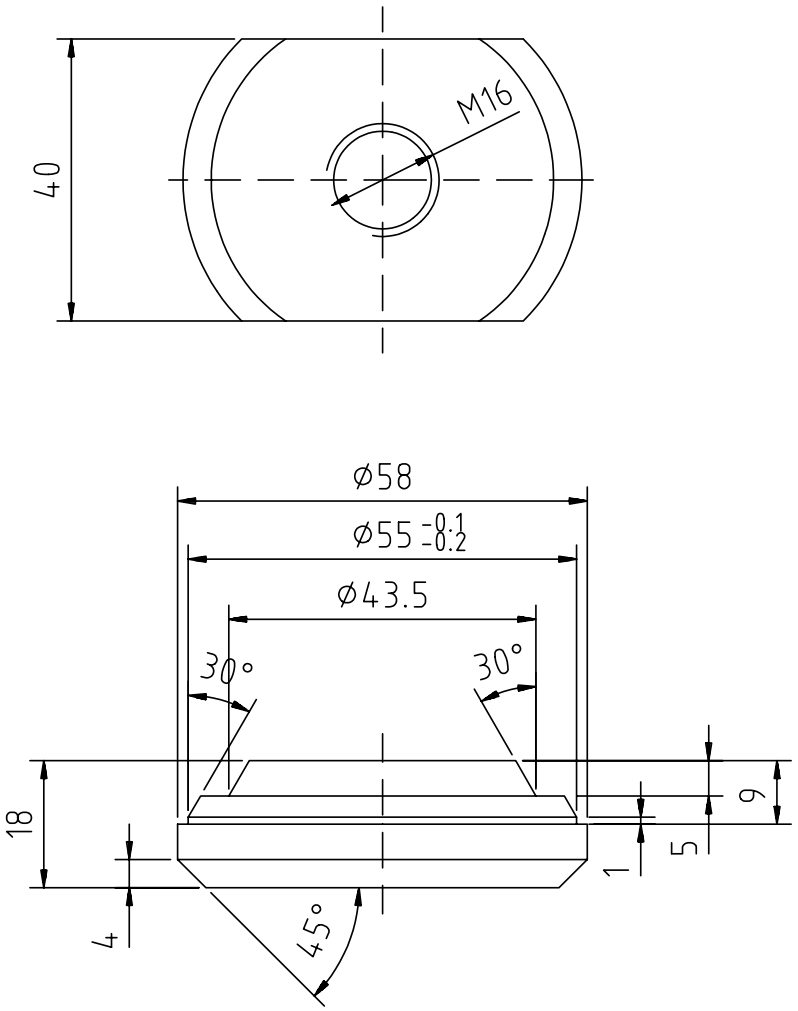

7.2 TOOL STATOR PULLER Ø 62 mm

Drawing Number: 96995168-01
Issue Date: 31/01/98
Material: B.MS
Dimensions in mm
Untoleranced machined dimensions to DIN 7168 m

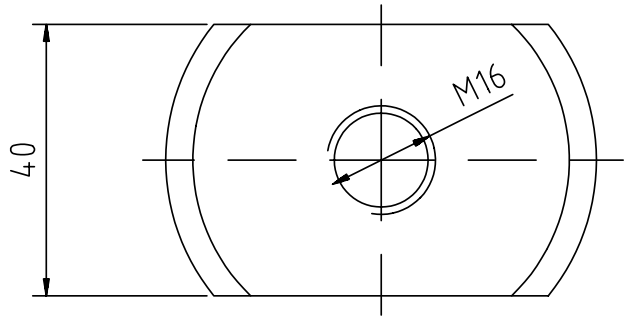

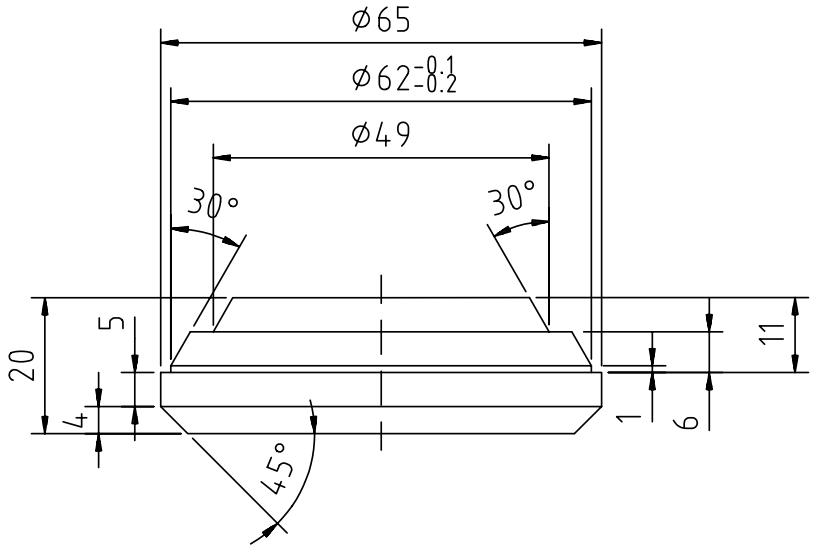

7.3 TOOL STATOR PULLER Ø 70 mm

Drawing Number: 96995182-00
Issue Date: 31/01/98
Material: B.MS
Dimensions in mm
Untoleranced machined dimensions to DIN 7168 m

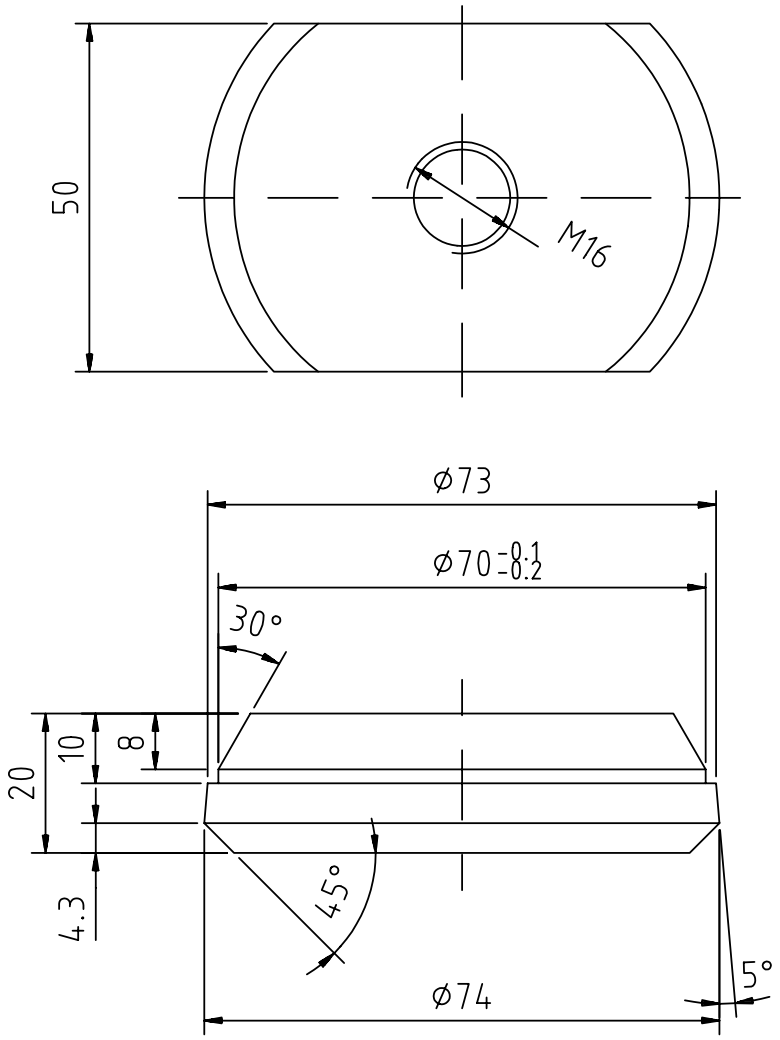

7.4 TOOL BEARING LOWER PRESS SMALL (S10/4, S13/4, S12/2, S16/2, S17/2, S18/2)

Drawing Number: 96995192-00
Issue Date: 04/11/99
Material: B.MS
Dimensions in mm
Untoleranced machined dimensions to DIN 7168 m

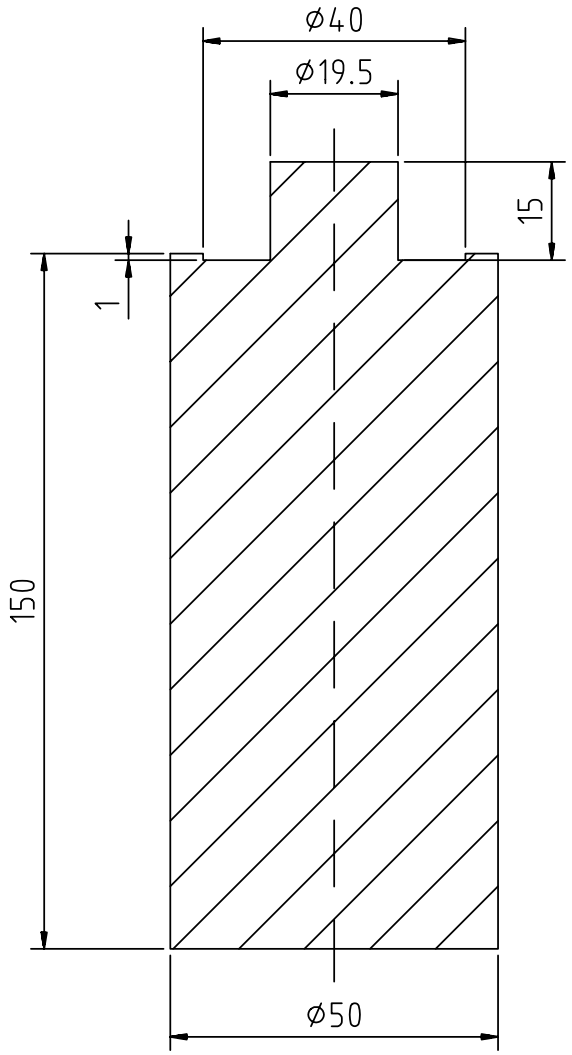

7.5 TOOL BEARING LOWER PRESS LARGE (S21/2, S26/2, S26/2, S30/2)

Drawing Number: 96995201-00
Issue Date: 04/11/99
Material: B.MS
Dimensions in mm
Untoleranced machined dimensions to DIN 7168 m

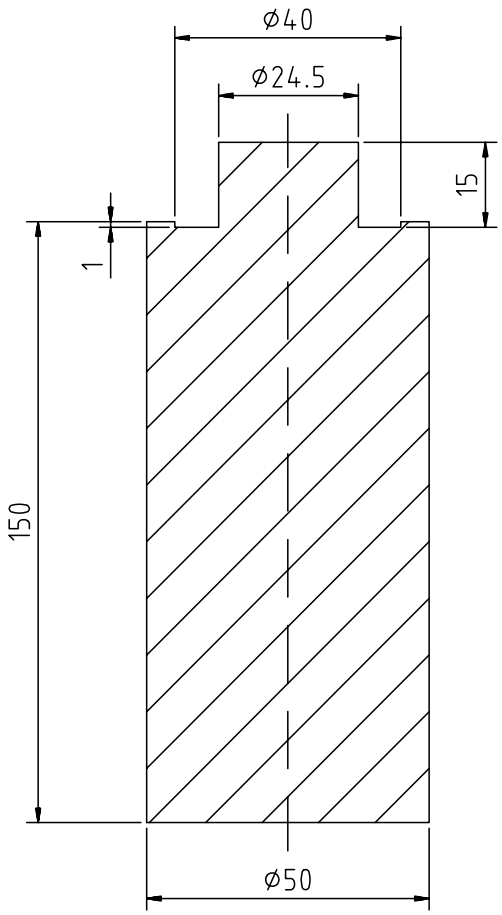

7.6 TOOL MECHANICAL SEAL PRESS INNER FIXED

Drawing Number: 96995190-00
Issue Date: 04/11/99
Material: NYLON
Dimensions in mm
Untoleranced machined dimensions to DIN 7168 m

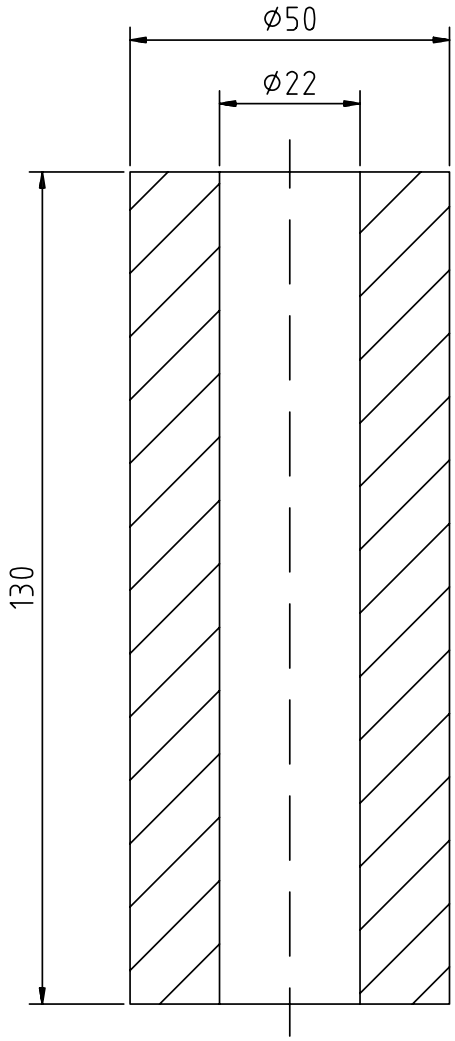

7.7 TOOL LIP SEAL PRESS INNER

Drawing Number: 96995189-00
Issue Date: 04/11/99
Material: NYLON
Dimensions in mm
Untoleranced machined dimensions to DIN 7168 m

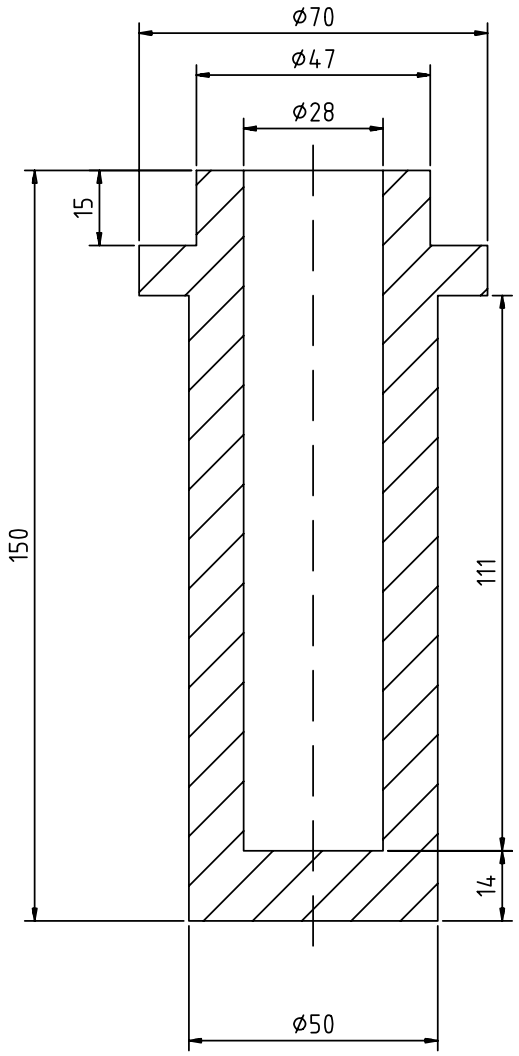

7.8 TOOL MECHANICAL SEAL PRESS INNER ROTATIONAL

Drawing Number: 96995191-00
Issue Date: 04/11/99
Material: NYLON
Dimensions in mm
Untoleranced machined dimensions to DIN 7168 m

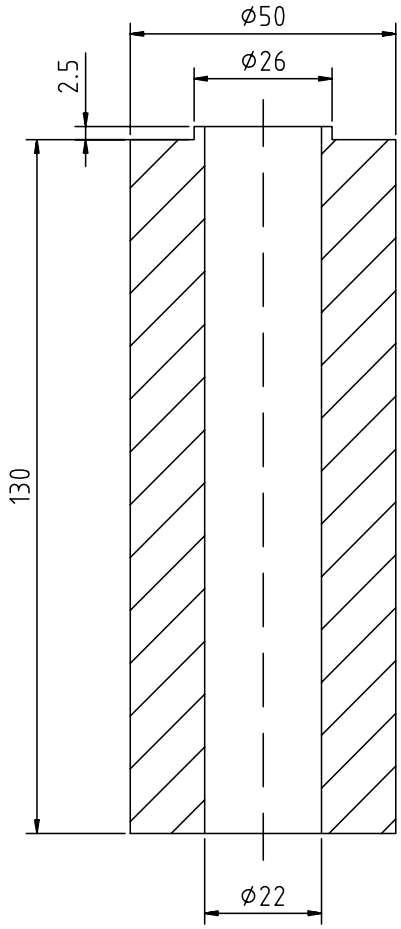

7.9 TOOL MECHANICAL SEAL SLEEVE OUTER

Drawing Number: 96995194-00
Issue Date: 04/11/99
Material: B.M.S
Dimensions in mm
Untoleranced machined dimensions to DIN 7168 m

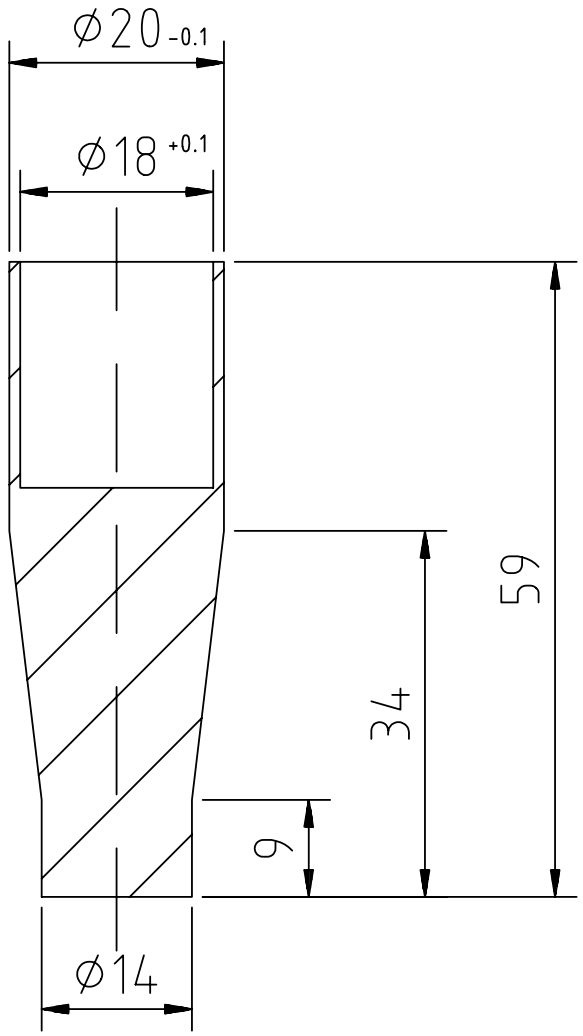

7.10 TOOL MECHANICAL SEAL PRESS OUTER FIXED/ROTATIONAL

Drawing Number: 96995193-00
Issue Date: 04/11/99
Material: NYLON
Dimensions in mm
Untoleranced machined dimensions to DIN 7168 m

Fixed

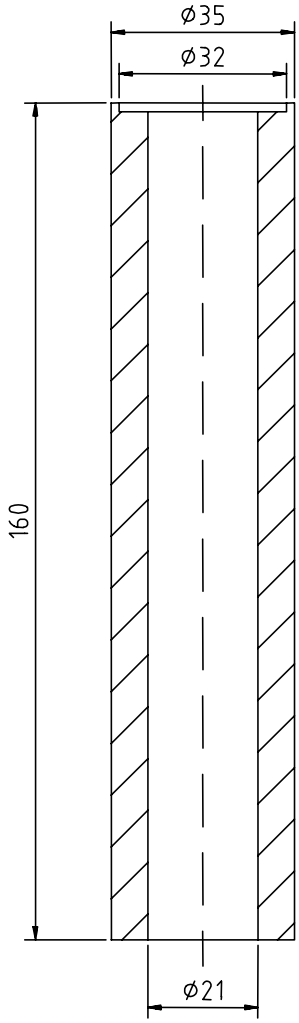

Rotational

7.11 TOOL STATOR INSERT DIAMETER 106.5 mm (S10/4, S13/4, S12/2, S16/2, S17/2, S18/2)

Drawing Number: 96995195-00
Issue Date: 04/11/99
Material: B.M.S
Dimensions in mm
Untoleranced machined dimensions to DIN 7168 m

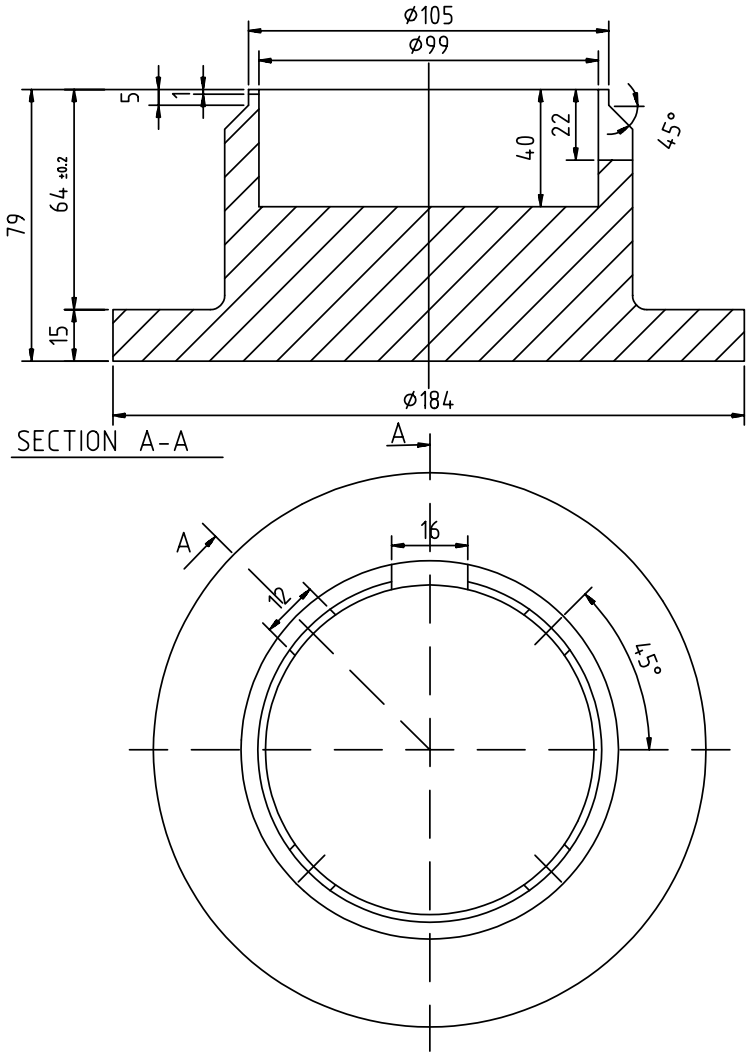

7.12 TOOL STATOR INSERT DIAMETER 135 mm (S21/2, S26/2, S26/2, S30/2)

Drawing Number: 96995196-00
Issue Date: 04/11/99
Material: B.M.S
Dimensions in mm
Untoleranced machined dimensions to DIN 7168 m

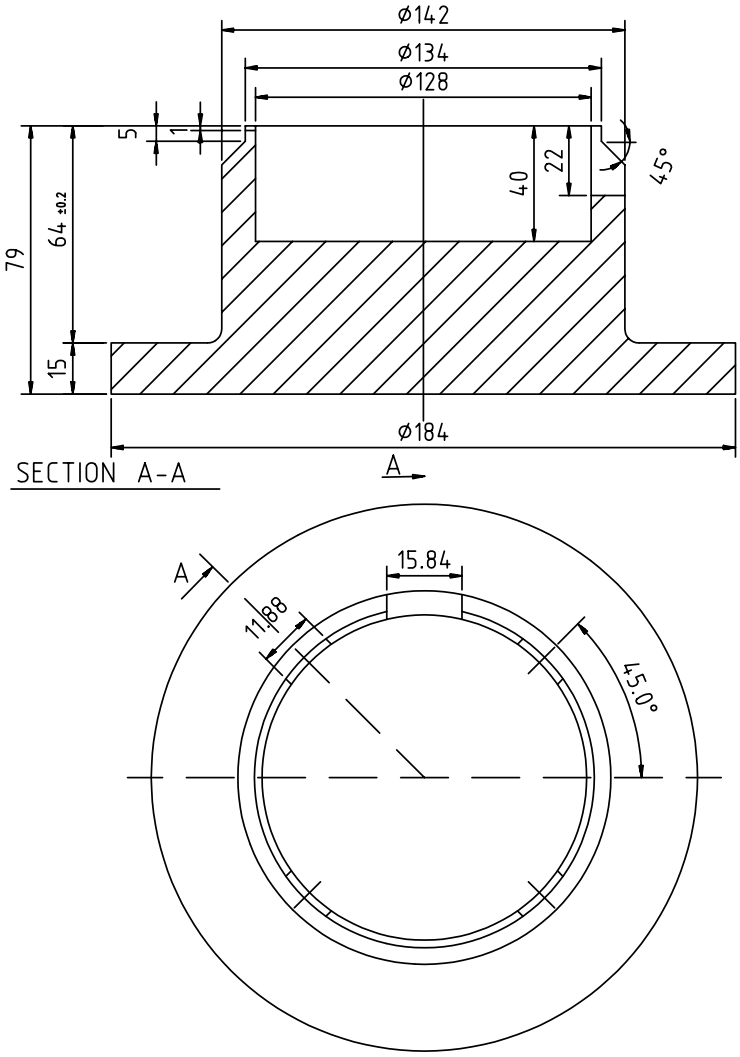

7.13 TOOL PRESSURE TEST (OIL CHAMBER CONNECTION)

Drawing Number: 96995206-00A
Issue Date: 04/11/99
Material: B.M.S
Dimensions in mm
Untoleranced machined dimensions to DIN 7168 m

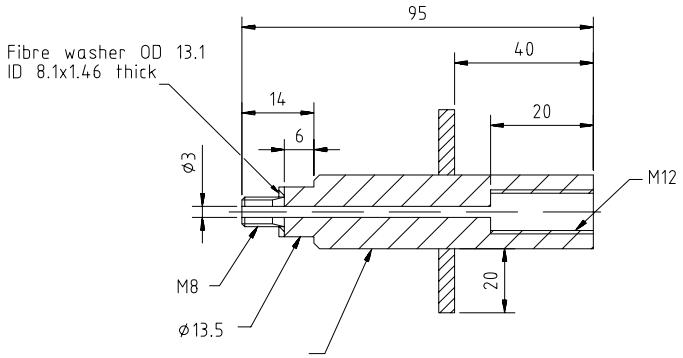

7.14 TOOL PRESSURE TEST (MOTOR HOUSING CONNECTION)

Drawing Number: 96995206-00B
Issue Date: 04/11/99
Material: B.M.S
Dimensions in mm
Untoleranced machined dimensions to DIN 7168 m

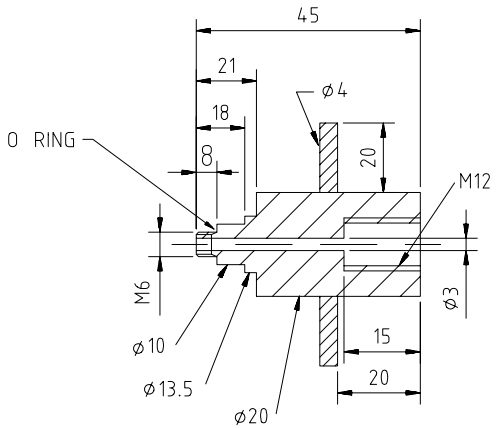

7.16 TOOL BEARING LOWER SUPPORT

Drawing Number: 96995202-00 & 96995203-00
Issue Date: 04/11/99
Material: B.M.S
Dimensions in mm
Untoleranced machined dimensions to DIN 7168 m

PIRANHA®	A	B	PART NO.
S10/4, S13/4, S12/2, S16/2, S17/2, S18/2	21	28	96995202
S21/2, S26/2, S26/2, S30/2	26	35	96995203

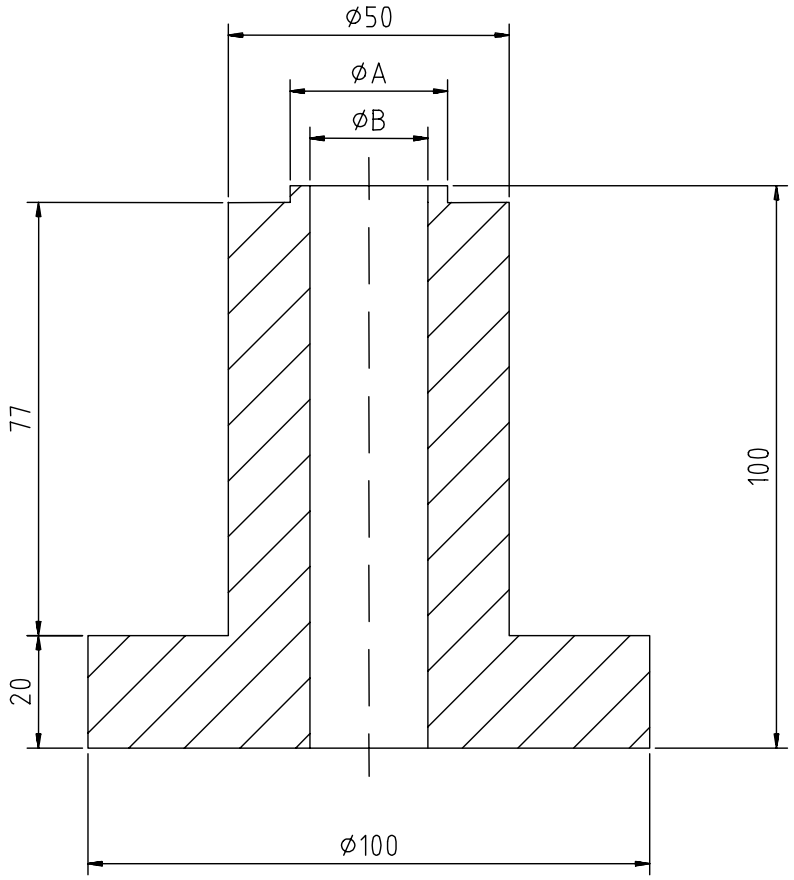

7.17 TOOL STATOR EXTRACTOR FRAME
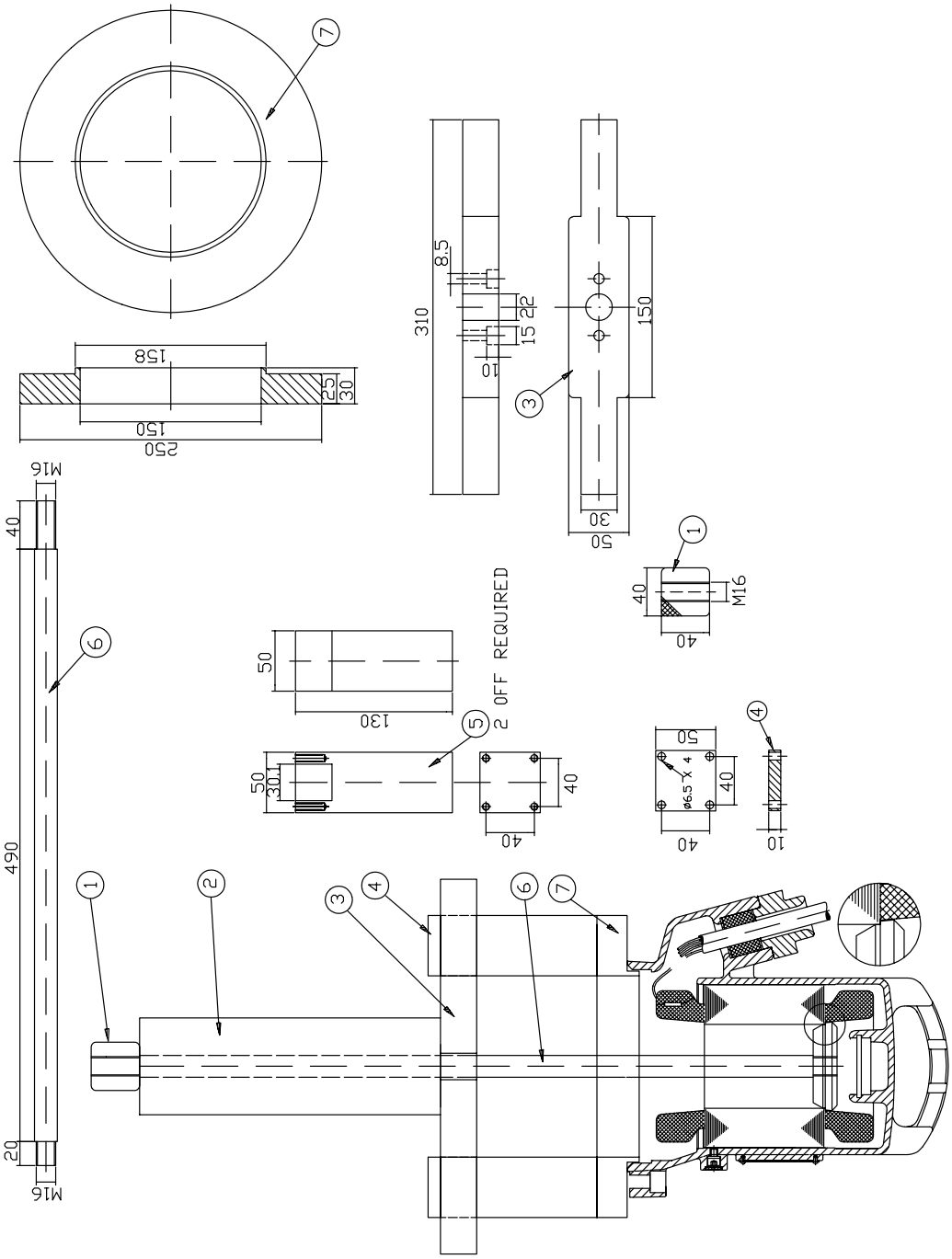
Drawing Number: 96995208-00
Issue Date: 03/12/99
Material: B.M.S
Dimensions in mm
Untoleranced machined dimensions to DIN 7168 m