DRAWING No.	ISSUE	MODIFICATIONS:
GA-138277-1	A	A ORIGINAL ISSUE

THESE COMMODITIES, TECHNOLOGY OR SOFTWARE ARE EXPORTED FROM THE UNITED STATES IN ACCORDANCE WITH THE EXPORT ADMINISTRATION REGULATIONS. DIVERSION CONTRARY TO THE U.S. LAW PROHIBITED.

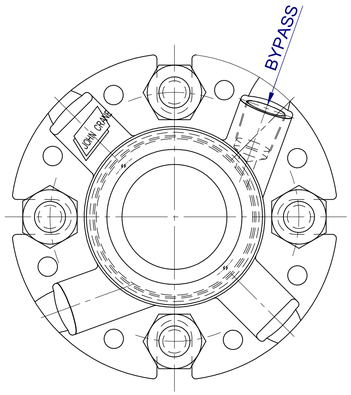

GLAND END VIEW
SCALE: NONE

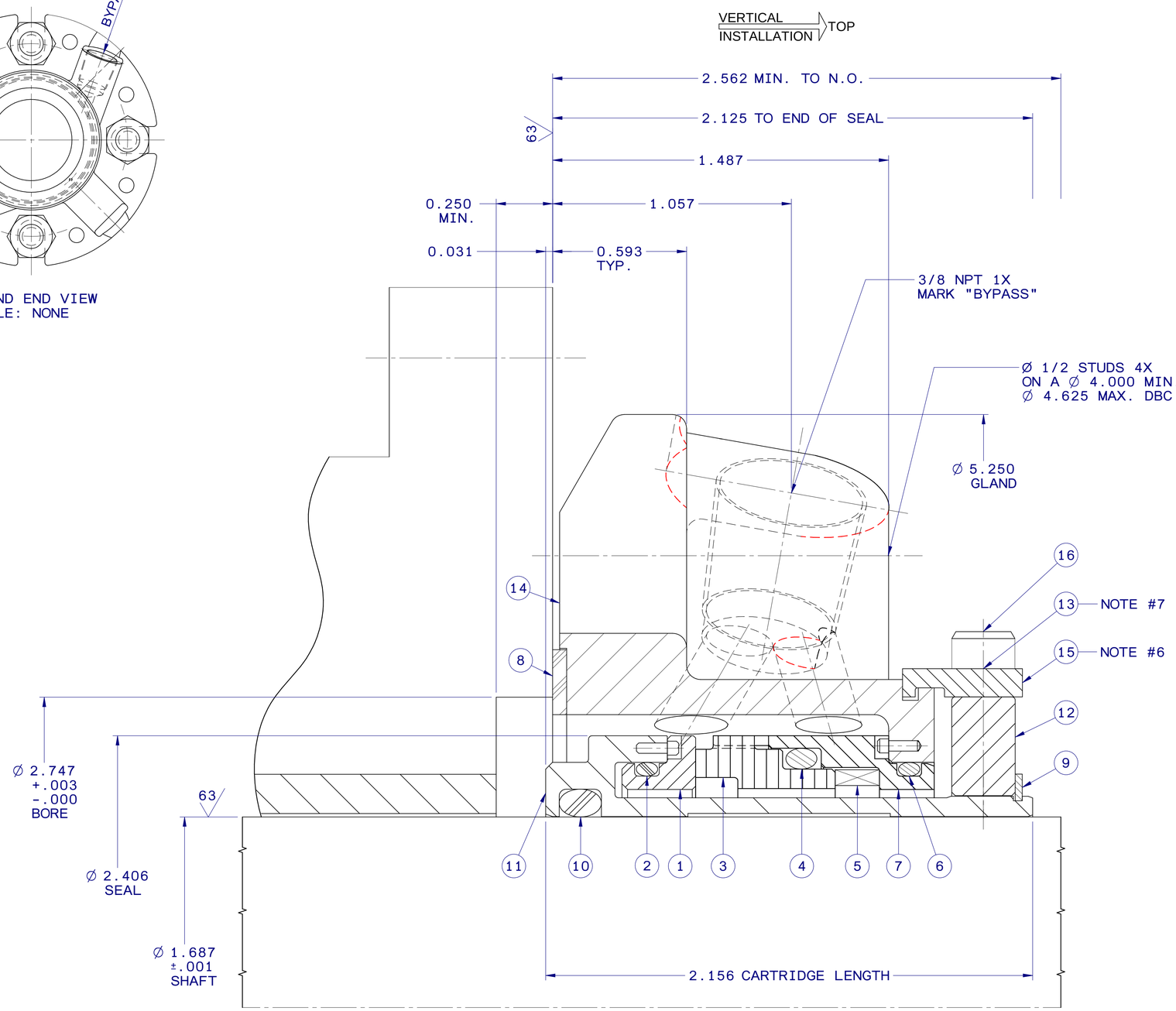

ITEM	DRAWING No.	MAT'L CODE	DESCRIPTION	MATERIAL	SPARES QTY	
1	H-1751-717	9221	MATING RING	SILICON CARBIDE	1	X
2	0000-033	9549	O-RING	FLUOROELASTOMER	1	X
3	C56-1750-1014	9055	PRIMARY RING	CARBON	1	X
4	0000-138	9549	O-RING	FLUOROELASTOMER	1	X
5	7593	0690	SPRING	ALLOY C-276	1	X
6	0000-033	9549	O-RING	FLUOROELASTOMER	1	X
7	C56-1750-1015	0550	RETAINER	316 SS	1	
8	H-1751-739	7510	GASKET	CHEMLOY	1	X
9	4101-8700-002	0500	SNAP RING	18-8 SS	1	
10	0000-224	9549	O-RING	FLUOROELASTOMER	1	X
11	H-1751-962	0550	SLEEVE ASS'Y	316 SS	1	
12	H-1751-734	0550	COLLAR	316 SS	1	
13	1710-3208-000	0650	SET SCREW	416 SS	4	X
14	H-1751-726	0550	GLAND PLATE ASS'Y	316 SS	1	
15	D-0002-684	0570	SPACER	SINTERED 316L SS	4	X
16	2108-3206-000	0550	SOCKET HEAD CAP SCREW	316 SS	4	X

WARRANTY APPLIES TO DIMENSIONAL DATA ONLY - COMPLETE SERVICE DATA WAS NOT SUPPLIED

SEAL ASS'Y NO.		BILL OF MATERIALS NUMBER	
IN :	ASSEMBLY	1-16	M200126
	SEAL HEAD		
OUT:	SPARES KIT		
	DESCRIPTION	ITEMS	NUMBER

EQUIPMENT REFERENCE	SEAL DATA	
OEM: **GOULDS**	API PLAN:	API CODE:
EQUIPMENT TYPE: **PUMP**	INSTRUCTION MANUAL REF.	
MODEL, FRAME / SIZE **VERTICAL,**	MATERIAL CODE: **X F55 1 X O58 H 316/HC**	
SERIAL / DRAWING No.		
CUSTOMER INFORMATION	**SERVICE DATA**	
CUSTOMER: **CRANE ENGINEERING SALES**	FLUID: **WATER**	
P.O. NUMBER: / PLANT ITEM NO:	BARRIER FLUID:	
END USER: **UNIVERSITY OF WISCONSIN FP&M**	CHAMBER PRESSURE:	
LOCATION: **MADISON, WI**	SUCTION PRESSURE:	
PLANT: **CHARTER STREET HEATING PLANT**	DISCHARGE PRESSURE:	
REFERENCE DATA: **HSP-44010-1 A, HSP-1030368-208 A**	PROCESS TEMPERATURE:	
SEAL FLUSH RATE: FLUID SYSTEM DRG:	SHAFT SPEED:	VAPOUR PRESSURE:
IPROJECTS NO: **85464-GWS**	SPECIFIC GRAVITY:	VISCOSITY:
SEAL SIZE: **Ø1.750"** SEAL TYPE: **5610V SINGLE CARTRIDGE**		DE / NDE DRG NO:

SCALE	DATE	DRAWN	CHECKED	APPROVED	DESIGN AUTH.
3.75:1	121212	SEP	SEP	GHP	US01EN

DRAWING No.	ISSUE
GA-138277-1	A

ADDITIONAL NOTES:

6. SPACER (ITEM #15) IS ONLY FOR THE PURPOSE OF PROPERLY LOCATING SEAL. AFTER GLAND PLATE, BEARING, SHAFT AND SEAL ARE LOCKED IN PLACE, SPACER MUST BE REMOVED BEFORE STARTING UNIT.
7. TO AVOID MOVEMENT OF SLEEVE IN RELATION TO SHAFT, SPOT FACE SHAFT UNDER TWO SET SCREWS 180° APART.
8. COOLING RECOMMENDATION: PROVIDE A FLUSH OF SUITABLE LIQUID TO THE SEAL.

THE FOLLOWING NOTES ARE IMPORTANT AND MUST BE OBSERVED FOR CORRECT SEAL INSTALLATION AND OPERATION

1. REMOVE ALL SHARP EDGES ON SHAFT & / OR SLEEVE BEFORE INSTALLATION OF SEAL.
2. LUBRICATE SHAFT/SLEEVE & SEAL WEDGE RING/O-RING/BELLOW TO ASSIST INSTALLATION OF SEAL WITH
3. END OF SEAL CHAMBER & AXIS OF SHAFT MUST BE AT 90° TO EACH OTHER WITHIN .002 F.I.M.
4. VENT GAS ENTRAPMENT BEFORE STARTUP.
5. ALL SHOULDERS OVER WHICH SEAL MUST PASS WHEN FITTING, TO BE PREPARED AS DIAGRAM AS SHOWN.

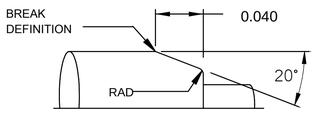

ALL DIMENSIONS ARE INCHES UNLESS OTHERWISE SPECIFIED.

All intellectual property rights (including but not limited to copyright and design rights whether registered or unregistered) in relation to this drawing together with the information contained in this drawing (including but not limited to know-how and confidential information) is proprietary to John Crane. Reproduction (whether in whole or in part) or use in any way whatsoever of this drawing or of any information contained therein is prohibited except with the prior written consent of John Crane. All rights in relation to this drawing are reserved.