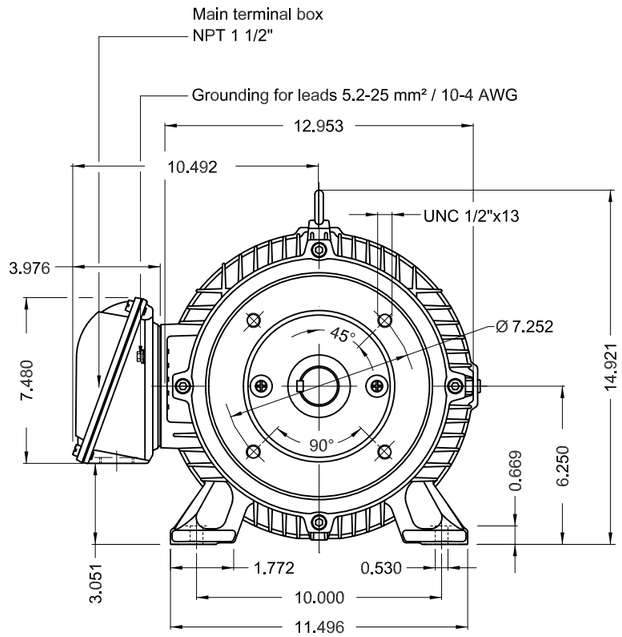

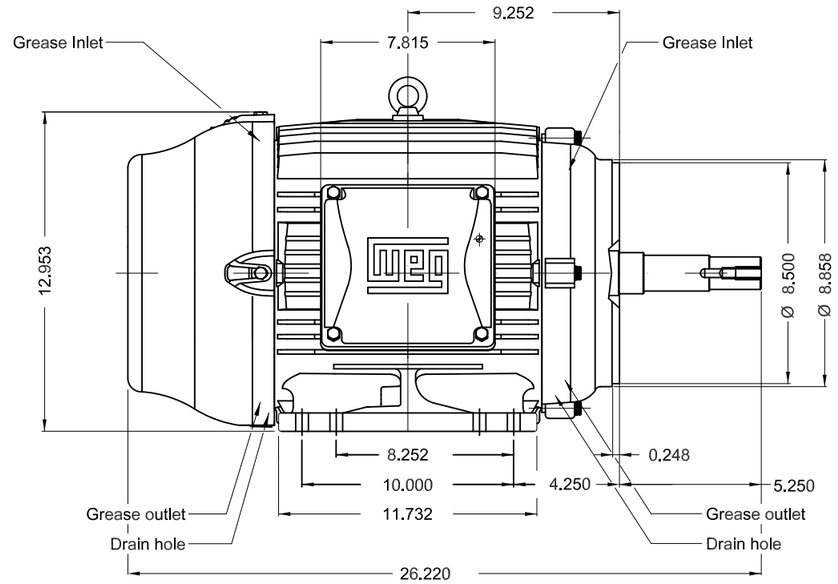

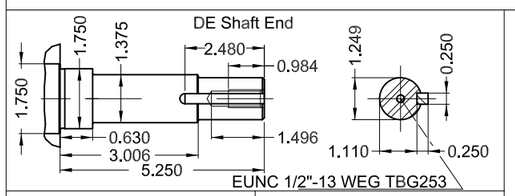

15 HP 04 Poles 60Hz | A

ECM	LOC	SUMMARY OF MODIFICATIONS	EXECUTED	CHECKED	RELEASED	DATE	VER

Color RAL 5009
Painting plan 203A
Mounting NEMA F-1
Mounting B34R(D)

EXECUTED	PIRWBUSER	THREE PHASE MOTOR W22 NEMA PREMIUM EFF.
CHECKED		FRAME 254/6JM IP55 TEFC
RELEASED		
REL DT.		WMO Jaragua do Sul Product Engineering

PREVIEW
WDD
SHEET 1 / 1

Dimensions in inches
XME A3

WEG's property. Forbidden reproduction without previous authorization.